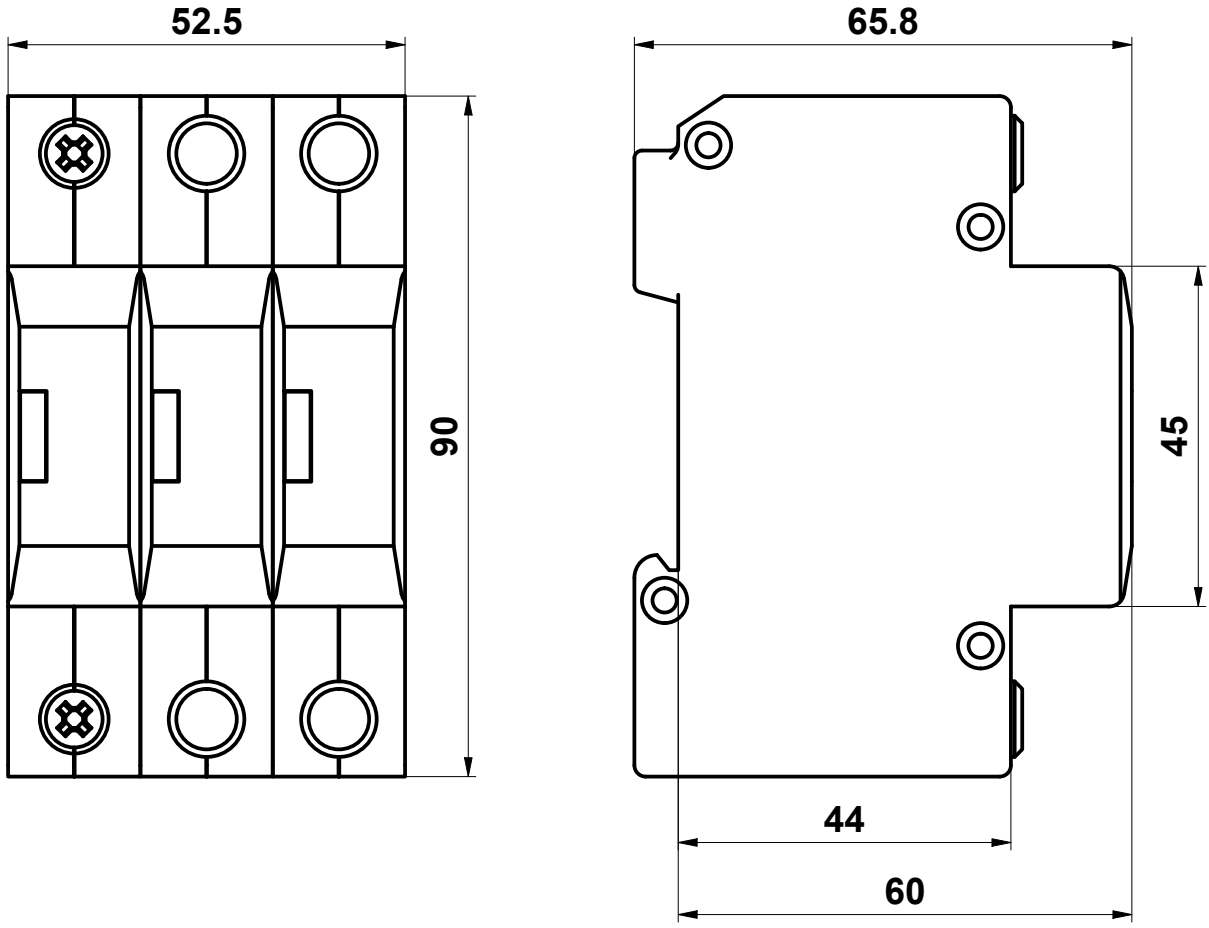
52.5
90
65.8
45
44
60